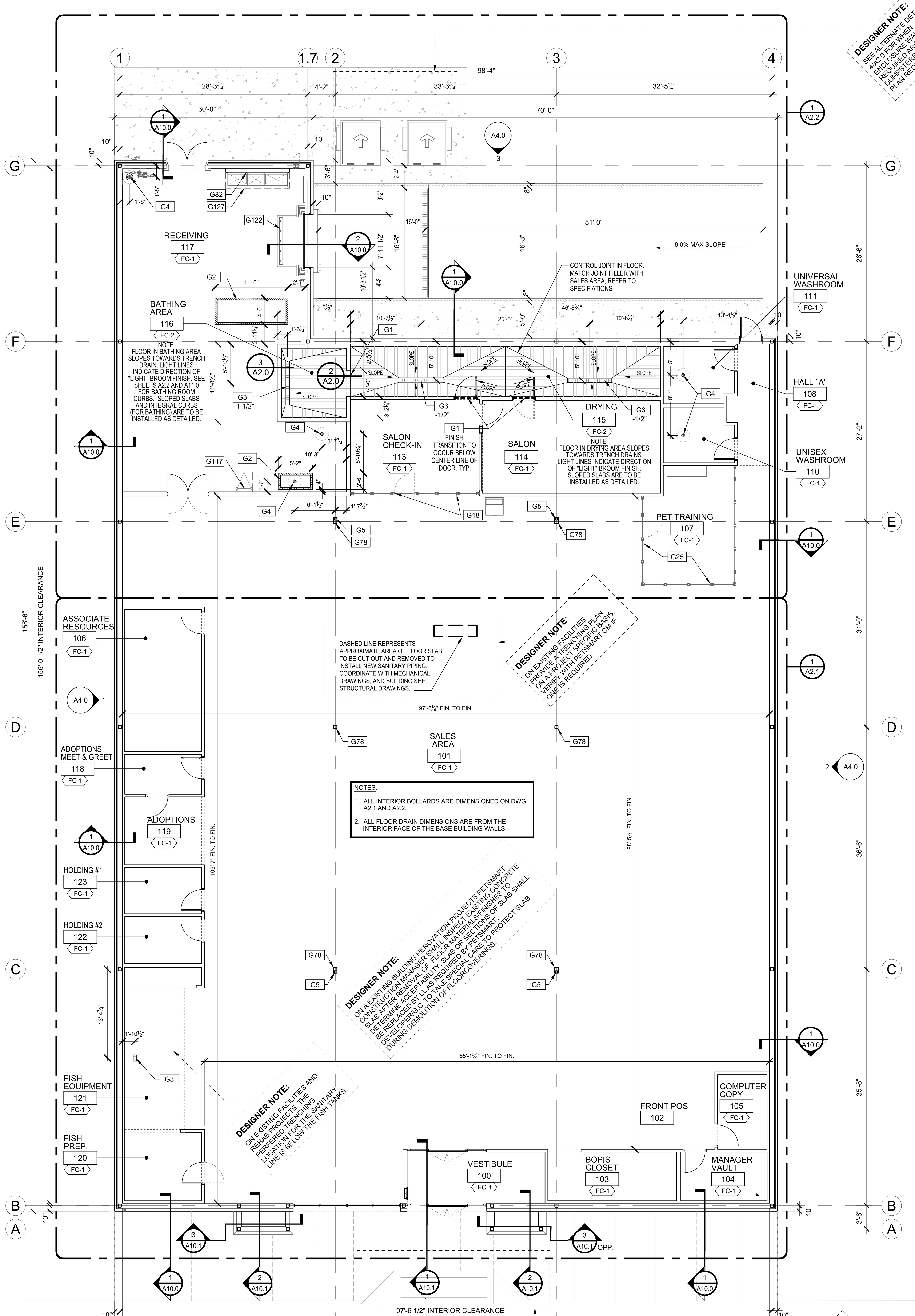

NOTES:

1. ALL INTERIOR BOLLARDS ARE DIMENSIONED ON DWG A2.1 AND A2.2.
2. ALL FLOOR DRAIN DIMENSIONS ARE FROM THE INTERIOR FACE OF THE BASE BUILDING WALLS.

DESIGNER NOTE: SEE ALTERNATE DETAIL 4/A2.0 FOR WHEN ENCLOSURE WALL IS REQUIRED AROUND THE DUMPSTERS DO TO SITE PLAN REQUIREMENTS.

DESIGNER NOTE: ON EXISTING FACILITIES PROVIDE A TRENCHING PLAN ON A PROJECT SPECIFIC BASIS. VERIFY WITH PETSMART CM IF ONE IS REQUIRED.

DESIGNER NOTE: ON A EXISTING BUILDING RENOVATION PROJECTS PETSMART CONSTRUCTION MANAGER SHALL INSPECT EXISTING CONCRETE SLAB AFTER REMOVAL OF FLOOR MATERIALS/FINISHES TO DETERMINE ACCEPTABILITY. SLAB OR SECTIONS OF SLAB SHALL BE REPLACED BY LL AS REQUIRED BY PETSMART. DEVELOPER/G.C. TO TAKE SPECIAL CARE TO PROTECT SLAB DURING DEMOLITION OF FLOORCOVERINGS.

DESIGNER NOTE: ON EXISTING FACILITIES AND REHAB PROJECTS THE PERFERED TRENCHING LOCATION FOR THE SANITARY LINE IS BELOW THE FISH TANKS.

DESIGNER NOTE: IN NON-PROTOTYPICAL LAYOUT, THE BARRIER-FREE ACCESSIBLE ENTRY RAMP SHOULD BE CENTERED ON DOOR LOCATION. PETSMART PREFERRED PRODUCT IS STEP-SAFE PRECAST POLYMER CONCRETE BARRIER-FREE COMPLIANT SAFETY TILE - COLOR SAFETY YELLOW.

NORTH

DESIGNER NOTE: TRUE NORTH TO BE PROJECT SPECIFIC. REVISE AS REQUIRED. IF THE NORTH DIRECTIONS IS ALREADY TOWARDS THE TOP OF THE PAGE, THERE IS NO NEED TO INCLUDE "PROJECT NORTH".

1 FLOOR FINISH PLAN (A2.0)
SCALE: 1/8" = 1'-0"

DESIGNER NOTE: SITE ARCHITECT SHALL CONFIRM NEED, HEIGHT & SIZE OF DUMPSTER ENCLOSURE. CONFIRM WITH DEVELOPER MATERIAL REQUIREMENTS.

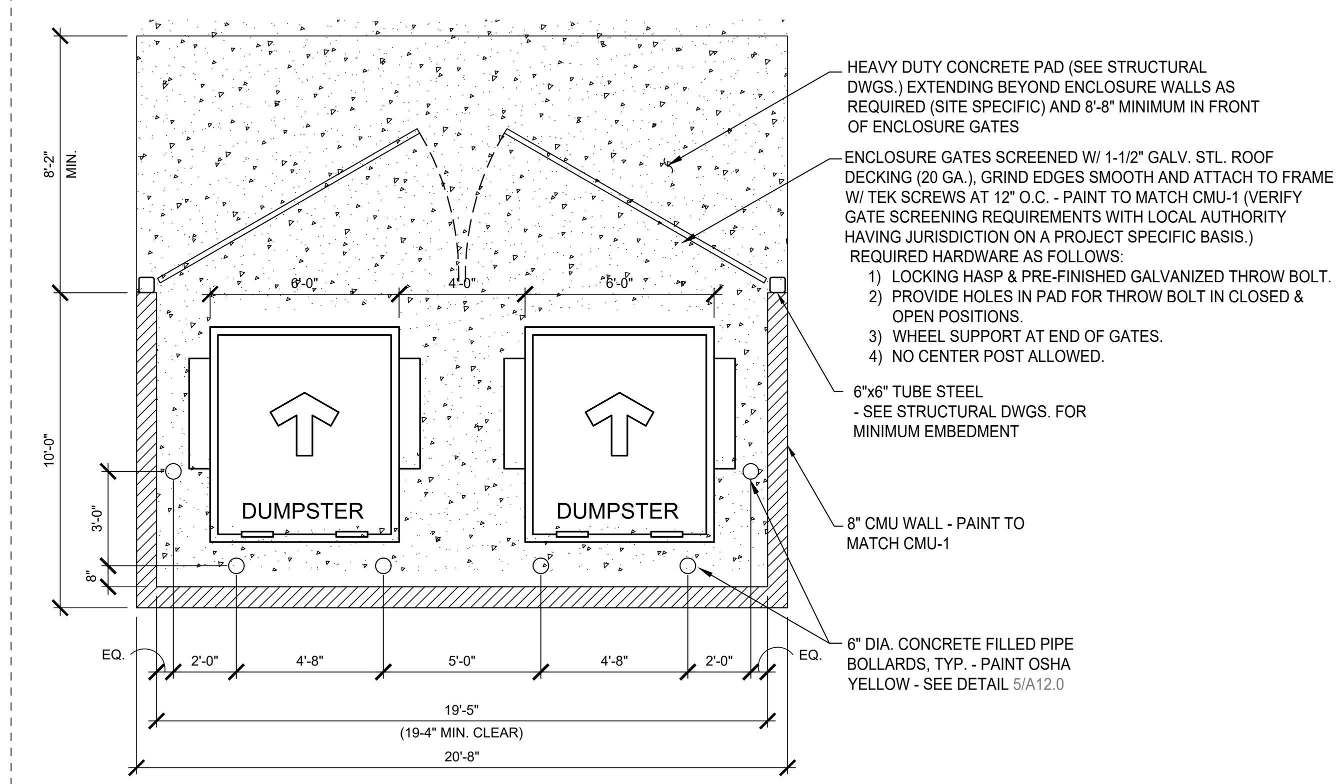

4 ALTERNATE DUMPSTER ENCLOSURE PLAN (A2.0)
SCALE: 1/4" = 1'-0"

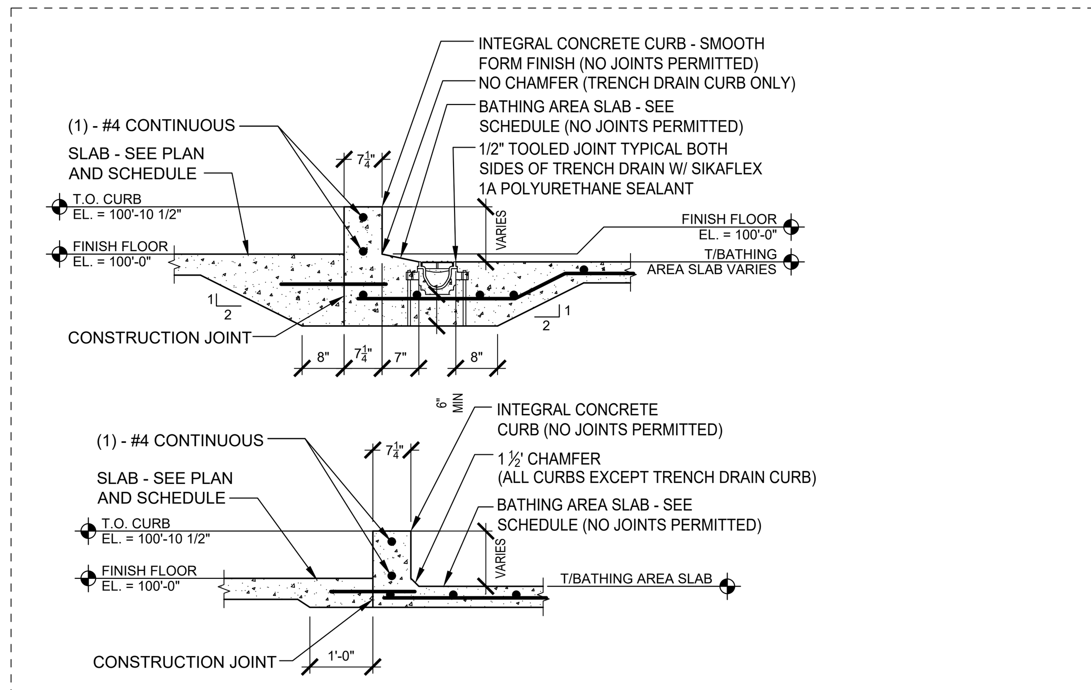

3 BATHING ROOM CURB (A2.0)
SCALE: 1/2" = 1'-0"

DESIGNER NOTE: DETAILS ARE TO BE USED WHEN FLOOR SLAB HAS ALREADY BEEN POURED IN PLACE AND NEW BATHING AREA FLOOR IS TO BE CUT INTO FLOOR

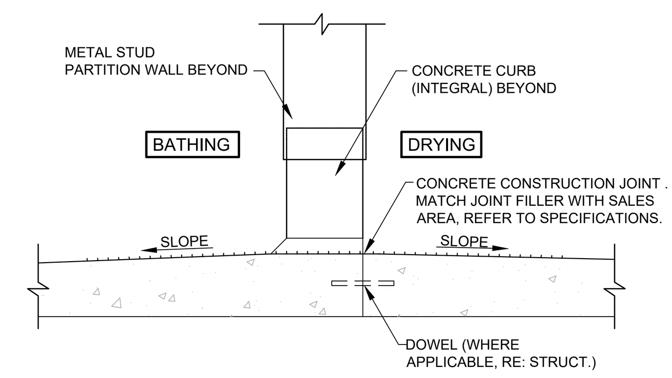

2 TRANSITION DETAIL (A2.0)
N.T.S.

LEGEND:

- SLOPED CONCRETE SLAB
- POLISHED OR EXPOSED CONCRETE FLOOR FINISH
- EXISTING EXTERIOR WALLS BY BASE BUILDING
- INDICATES DIRECTION OF SLOPE DOWN.

DESIGNER NOTE: DESIGNER TO INCLUDE ONLY IF TENANT IMPROVEMENT PROJECT. OTHERWISE REMOVE FROM LEGEND.

FLOOR FINISH LEGEND :

NOTE: CONTRACTOR TO SEE SHEET 'F2.0' FOR LIST OF REQUIRED POLISHED CONCRETE VENDORS

FC-1 POLISHED CONCRETE - AMERIPOLISH SYSTEM (NO COLOR & POLISH TO #800 GRIT. FILL/SEAL ALL CONSTRUCTION AND CONTROL JOINTS (COLOR TO MATCH). SEE SPECIFICATIONS.

FC-2 EXPOSED CONCRETE WITH (LIGHT) SOFT BROOM FINISH, HARD TROWLED SMOOTH AND FINISHED WITH A VERY SOFT HORSE HAIR BROOM (ERR ON THE SIDE OF SMOOTH). PETSMART CONSTRUCTION MANAGER TO HAVE FINAL APPROVAL OF FINISH. LIGHTLY STONE AS NEEDED TO MINIMIZE ROUGHNESS. APPLY (2) COATS OF "AQUAPEL PLUS" SEALER AS MANUFACTURED BY L & M CONSTRUCTION CHEMICAL. DIRECTION OF SLOPE AS INDICATED.

GENERAL NOTES:

1. SEE SHEET A0.1 FOR ARCHITECTURAL KEY NOTES
2. NO VISIBLE FLOOR CUTS ACCEPTABLE @ ANY LOCATIONS OTHER THAN THOSE INDICATED IN THE DRAWINGS, UNLESS APPROVED BY PETSMART CONSTRUCTION MANAGER.
3. ALL FLOOR FINISH DIMENSIONS ON THIS SHEET ARE TO FINISHED SURFACE UNLESS NOTED OTHERWISE.
4. ALL WALLS BEHIND MILLWORK SHALL HAVE FINAL FINISH PRIOR TO INSTALLATION. ALL FLOORING FINISH MATERIAL SHALL BE INSTALLED PRIOR TO MILLWORK INSTALLATION.
5. CERAMIC TILE TO EXTEND UNDER ALL FIXTURES, MILLWORK & EQUIPMENT UNLESS NOTED OTHERWISE.
6. ASSUMED FINISH FLOOR ELEVATION WITHIN THE ARCHITECTURAL DRAWINGS IS AT 100.00'.
7. G.C. TO CLEAN NON-POLISHED SLABS (LT.BROOM AREAS) WITH A HARD BRISTLE BRUSH. DO NOT DAMAGE THE FINISH.
8. G.C. TO SCHEDULE A "PRE-SLAB" MEETING WITH PETSMART AND ALL ASSOCIATED TRADES PRIOR TO ANY ORDERING, POURING OR INSTALLATION OF CONCRETE SLABS.
9. ALL EXPOSED, NON-POLISHED CONCRETE FLOORS TO RECEIVE 2 COATS OF AQUA-PEL PLUS SEALER BY L&M CONSTRUCTION CHEMICAL.
10. AT ALL AREAS OF EXPOSED CONCRETE FLOOR FINISH, EXTREME CAUTION MUST BE USED TO PROTECT THE FLOOR FROM CERAMIC TILE GROUT. CONTRACTOR IS TO BE RESPONSIBLE FOR THE REMOVAL AND REPAIR OF CONCRETE FLOOR, OR REPLACEMENT OF THE CONCRETE SLAB AND CONCRETE FINISHES OF THE AFFECTED AREAS.
11. G.C. TO PROTECT BATHING (116) & DRYING (115) FLOORS AFTER INSTALLATION. CONTRACTOR IS TO BE RESPONSIBLE FOR THE REMOVAL AND REPAIR OF CONCRETE FLOOR, OR REPLACEMENT OF THE CONCRETE SLAB AND CONCRETE FINISHES OF THE AFFECTED AREAS.
12. G.C. TO PROTECT POLISHED CONCRETE FLOOR SLABS FROM DAMAGE DURING CONSTRUCTION. CONTRACTOR IS TO BE RESPONSIBLE FOR THE REMOVAL AND REPAIR OF CONCRETE FLOOR, OR REPLACEMENT OF THE CONCRETE SLAB AND CONCRETE FINISHES OF THE AFFECTED AREAS.
13. CONCRETE SLAB:
    - CONCRETE CONSTRUCTION JOINTS ALLOWED IN BATHING AND DRYING SLAB: WHERE SHOWN "C.J." SPECIFICALLY INDICATES CONSTRUCTION JOINTS, REFER TO STRUCTURAL FOR ADDITIONAL INFORMATION. SEE DETAIL 5/A2.0.
    - ALL CONCRETE SLAB CONSTRUCTION JOINTS IN THE BATHING AND DRYING TO BE FILLED WITH SIKAFLEX IA POLYURETHANE SEALANT.
    - CONTRACTOR TO PROVIDE PROTECTION OR COVER ALL TRENCH DRAINS DURING CONSTRUCTION, TO PREVENT DEBRIS FROM ENTERING DRAINS. G.C. WILL BE RESPONSIBLE TO PROVIDE VIDEO OF ALL DRAIN LINES.
    - DIMENSIONS ON PLAN ARE TO THE EDGE OF CONCRETE. ENSURE TRANSITIONS THAT OCCUR AT CONSTRUCTION JOINTS OCCUR UNDER OR AT FACE OF WALLS TO AVOID JOINT/CRACKING VISIBILITY.
    - ***THE LOCATIONS OF DRAINS AND CONCRETE SLAB DEPRESSED/SLOPED AREAS ARE CRITICAL. ANY DEVIATION FROM THE DIMENSIONS SHOWN ON PLANS IS NOT ACCEPTABLE AND CONCRETE SHALL BE REMOVED AND REPLACED AT THE CONTRACTOR'S COST WITH NO EFFECT TO THE SCHEDULE.***

CONCRETE SLAB REPAIR NOTES:

AT EXISTING SLAB; FILL ALL HOLES PRIOR TO INSTALLATION OF POLISHED FLOOR SYSTEM.

CRACK REPAIR, SURFACE SPALLING, POP OUTS OR BOLT HOLES
- USE RAPID REFLOOR BY METZGER MCGUIRE OR APPROVED EQUAL

SURFACE REPAIR LARGER THAN 6" IN DIAMETER, INFILL 1/2" TO 2" IN DEPTH
- ARDEX PCT - POLISHABLE CONCRETE TOPPING OR APPROVED EQUAL

SLAB SCHEDULE:

LOCATION	THICKNESS	REINFORCEMENT	
BATHING AREA DRYING AREA	4"	#4 AT 12" OC EACH WAY CENTER OF SLAB	10 MIL VAPOR RETARDER (ASTM D-2103) OVER 4" GRANULAR (SEE SOILS REPORT)
6" INTERIOR SLAB (RECEIVING)	6"	SEE STRUCTURAL DRAWINGS AND SOIL REPORT	10 MIL VAPOR RETARDER (ASTM D-2103) OVER 4" GRANULAR (SEE SOILS REPORT)
4" INTERIOR SLAB	4"	SEE STRUCTURAL DRAWINGS AND SOIL REPORT	10 MIL VAPOR RETARDER (ASTM D-2103) OVER 4" GRANULAR (SEE SOILS REPORT)
SIDEWALK	4"	SEE STRUCTURAL DRAWINGS AND SOIL REPORT	4" GRANULAR

SLAB CUTTING AND FILL:

THIS CONTRACTOR IS REQUIRED TO PROVIDE ALL SLAB CUTTING, TRENCHING, REMOVAL, AND PATCHING/INFILL TO ACCOMMODATE ALL REQUIRED NEW UNDER FLOOR SANITARY PIPING. REFER AND COORDINATE WITH PLUMBING DRAWINGS P1.0, P1.1, AND MECHANICAL CONTRACTOR.

FOR SLAB INFILL:

1) CONTRACTOR TO ADD CLEAN SAND FILL MIN. 12" COVER AROUND PIPING, AND 3/4" CLEAR STONE FILL MATCHING EXISTING LAYERING.
2) PROVIDE 24" LONG DOWELS AT 24" O.C. DOWELLED AND HILTI INTO EXISTING SLAB EDGE 12" DEEP.
3) PROVIDE 6X6 WIRE MESH SHEET AND SECURE TO DOWELS WITH WITH WIRE TIES. OVERLAP SHEETS ONE TO THE OTHER. ROUGH EXISTING SLAB EDGE AND PROVIDE CONCRETE BONDING AGENT TO CLEAN SURFACE OF EXISTING SLAB FOR ADHESION WITH NEW.
4) FILL CAVITY WITH POURED CONCRETE OF 25MPa MATCHING EXISTING SURFACE AND FINISH. FEATHER SMOOTH JOINTS AND MAKE SEAMLESS.

CLIENT:
PETSMART
19601 North 27th Avenue
Phoenix, Arizona 85027 - (623) 580-6100
CLIENT REF #: 1234

PROJECT:

14K 2025 CANADIAN INSTRUCTION SET

FEBRUARY 12, 2025

CONSULTANT:

ARCHITECT:

SEAL:

CITY SEAL:

DESIGNER NOTE: SHOW THIS INFORMATION ON ARCHITECTURAL DRAWINGS FOR RETROFIT STORES ONLY

DISCLAIMER: COPYRIGHT:
THIS DRAWING AND DESIGN IS COPYRIGHT PROTECTED WHICH SHALL NOT BE USED, REPRODUCED OR REVISED WITHOUT WRITTEN PERMISSION BY PETSMART. THE CONTRACTOR SHALL CHECK AND VERIFY ALL DIMENSIONS AND UTILITY LOCATIONS AND REPORT ALL ERRORS AND OMISSIONS PRIOR TO COMMENCING WORK.
THIS DRAWING IS NOT TO BE SCALED.

ISSUED FOR:

NUMBER	ISSUE	DATE

PROJECT NO: CA0045686.0146
DATE: 02.12.25
ORIGINAL SCALE: AS NOTED
DESIGNED BY:
DRAWN BY:
CHECKED BY:
IF THIS BAR IS NOT 1" LONG, ADJUST YOUR PLOTTING SCALE.
1"
PAGE #: 7 OF: 53
DISCIPLINE: ARCHITECTURAL

TITLE:

FLOOR & FINISH PLAN

SHEET NUMBER: **A2.0**